Southern Nevada Amendments

To The

2006

International Residential Code

Published: October 12, 2006

Clark County
4701 West Russell Road
Las Vegas, NV 89118
(702) 455-3000

City of Las Vegas
731 S. 4th Street
Las Vegas, NV 89101
(702) 229-6251

City of Henderson
240 Water Street
Henderson, NV 89015
(702) 267-3650

Boulder City
401 California Avenue
Boulder City, NV 89005
(702) 293-9282

North Las Vegas
2240 Civic Center Drive
North Las Vegas, NV 89030
(702) 633-1577

City of Mesquite
10 E. Mesquite Blvd.
Mesquite, NV 89027
(702) 346-2835

Pahrump Regional Planning District
1210 E. Basin Ave. St. 1
Pahrump, NV 89060
(775) 751-3773

PREFACE

This document comprises the Southern Nevada Amendments to the 2006 International Residential Code as published by the International Code Council. The Amendments were developed by the jurisdictions listed on the cover page to be adopted by reference. These Amendments are not to be considered part of a local government's building code unless they have been adopted by that local government. These Amendments are not intended to prevent the use of any material or method of construction not specifically prescribed herein, provided any alternate has been approved and its use authorized by the building official. This document is available to be adopted by any jurisdiction without permission or approval from the jurisdictions listed on the cover page.

CHAPTER 1 ADMINISTRATION

Chapter 1 is deleted in its entirety except Section R101.

R101.1 Title

Section R101.1 is amended to read as follows:

R101.1 Title These provisions shall be known as the *Residential Code for one- and two-family Dwellings* of the City of Las Vegas, City of North Las Vegas, City of Henderson, City of Boulder City, City of Mesquite, City of Pahrump and Clark County, and shall be cited as such and will be referred to herein as "this code".

R101.2 Scope

Section R101.2 is amended to read as follows:

The provisions of the *International Residential Code for One- and Two-family Dwellings*, shall apply to the construction, alteration, movement, enlargement, replacement, repair, equipment, use and occupancy, location, removal, and demolition of detached one- and two-family dwellings and townhouses not more than three stories above-grade in height with a separate means of egress and their accessory structures. Where this code refers to codes not adopted by the jurisdiction, the applicable code adopted by the jurisdiction shall govern.

R301.1.2 Construction systems

Section R301.1.2 is amended by adding a second paragraph to read as follows:

All structural plain (unreinforced) concrete, plain (unreinforced) masonry, and rubble stone masonry construction is prohibited. All tables, figures and references for these unreinforced systems shall be deleted.

Table R301.2(1) Climatic and Geographic Design Criteria

Table R301.2(1) is amended to read as follows:

TABLE R301.2(1)
CLIMATIC AND GEOGRAPHIC DESIGN CRITERIA

GROUND SNOW LOAD	WIND SPEED[d] (mph)	SEISMIC DEISGN CATEGORY[f]	SUBJECT TO DAMAGE FROM				~~WNITER DESIGN TEMP~~ DESIGN DRY-BULB TEMP[e]	ICE BARRIER UNDER-LAYMENT REQUIRED[h]	FLOOD HAZARDS[g]	AIR FREEZING INDEX[i]	MEAN ANNUAL TEMP [j]
			Weathering[a]	Frost line depth[b]	Termite[c]						
0<2000' 5<3600' 10<4500'	90	D_0	Negligible	1'<5000'	Moderate to heavy		Winter 27°F Summer 112°F	No	✸	35 (°F-days)	66.3°F

SPRING MOUNTAIN RANGE

GROUND SNOW LOAD	WIND SPEED[d] (mph)	SEISMIC DEISGN CATEGORY[f]	SUBJECT TO DAMAGE FROM				DESIGN DRY-BULB TEMP[e]	ICE BARRIER UNDER-LAYMENT REQUIRED[h]	FLOOD HAZARDS[g]	AIR FREEZING INDEX[i]	MEAN ANNUAL TEMP [j]
			Weathering[a]	Frost line depth[b]	Termite[c]						
10<4500' 15<6000' IBC for Elevations >6000'	90	D_0	Severe	1'<5000' 3'>5000'	Moderate to heavy		Winter 5°F Summer 92°F	Yes	✸	734 (°F-days)	48.1°F

For SI: 1 pound per square foot = 0.0479 kN/m^2, 1 mile per hour = 0.447 m/s.

a. Weathering may require a higher strength concrete or grade of masonry than necessary to satisfy the structural requirements of this code. The weather column shall be filled in with the weathering index (i.e., "negligible," "moderate" or "severe") for concrete as determined from the Weathering Probability Map [Figure R301,2(3)]. The grade of masonry units shall be determined from ASTM C34, C55, C62, C73, C90, C129, C145, C216 or C652.
b. The frost line depth may require deeper footings than indicated in Figure R403.1(1). The jurisdiction shall fill in the frost line depth column with the minimum depth of footing below finish grade.
c. The jurisdiction shall fill in this part of the table to indicate the need for protection depending on whether there has been a history of local subterranean termite damage.
d. The jurisdiction shall fill in this part of the table with the wind speed from the basic wind map [Figure R301.2(4)]. Wind exposure category shall be determined on a site-specific basis in accordance with Section R301.2.1.4
~~e. The outdoor design dry-bulb temperatures shall be selected from the columns of 971/2-percent values for winter from Appendix D of the International Plumbing Code. Deviations from the Appendix D temperatures shall be permitted to reflect local climates or local weather experience as determined by the building official.~~
e. The temperature shall be permitted to reflect local climate or local weather experience as determined by the building official.
f. The jurisdiction shall fill in this part of the table with the Seismic Design Category determined from Section R301.2.2.1.
✸ g. September 27. 2002 " The Flood Insurance Study for Clark County, Nevada and Incorporated Areas", as amended or revised with the accompanying Flood Insurance Rate Map (FIRM) and Flood Boundary and Floodway Map (FBFM) and related supporting data along with any revisions thereto.
h. In accordance with Sections R905.2.7.1, R905.4.3.1, R905.5.3.1, R905.6.3.1, R905.7.3.1 and R905.8.3.1, where there has been a history of local damage from the effects of ice damming, the jurisdiction shall fill in this part of the table with "YES". Otherwise, the jurisdiction shall fill in this part of the table with "NO".
i. The jurisdiction shall fill in this part of the table with the 100-year return period air freezing index (BF-days) from Figure R403.3(2) or from the 100-year (99%) value on the National Climatic Data Center data table "Air Freezing Index-USA Method (Base 32° Fahrenheit)" at www.ncdc.noaa.gov/fpsf.htm.
j. The jurisdiction shall fill in this part of the table with the mean annual temperature from the National Climatic Data Center data table "Air Freezing Index-USA Method (Base 32° Fahrenheit)" at www.ncdc.noaa.gov/fpsf.htm.

R301.2.2 Seismic provisions

Section R301.2.2 is amended by deleting the Exception with no replacement.

R301.3 Story height

Section R301.3 items 1, 2, and 3 are amended to read as follows:

1. For wood wall framing, the laterally unsupported bearing wall stud height permitted by Table R602.3(5) plus a height of floor framing not to exceed 16 inches, <u>except that a floor framing greater than 16 inches and not exceeding 24 inches, the braced wall length required by Table R602.10.1 shall be multiplied by 1.05.</u>

   Exception: For wood framed wall buildings with bracing in accordance with Table R602.10.1, the wall stud clear height used to determine the maximum permitted story height may be increased to 12 feet without requiring an engineered design for the building wind and seismic force resisting systems provided that the length of bracing required by Table R602.10.1 is increased by multiplying by a factor of 1.20. Wall studs are still subject to the requirements of this section.

2. For steel wall framing, a stud height of 10 feet, plus a height of floor framing not to exceed 16 inches. <u>Where floor height is between 16 inches and 24 inches, the minimum percentage of full height structural sheathing shall be multiplied by 1.05.</u>

3. For masonry walls, a maximum bearing wall clear height of 12 feet plus a height of floor framing not to exceed ~~16 inches~~ <u>24 inches.</u>

   Exception: An additional 8 feet is permitted for gable end walls.

Table R301.5 Minimum Uniformly Distributed Live Loads

Table R301.5 is amended by changing the live load figure for sleeping rooms and by adding footnote "j" to read as follows:

Sleeping rooms	~~30~~ <u>40</u>

j. <u>Where it can be determined in designing floor that the actual live load will be greater than the value shown in Table R301.5, the actual live load shall be used in the design of such buildings or portions thereof. Special provisions shall be made for machine and apparatus loads.</u>

R301.6 Roof load

Section R301.6 is amended by adding a second sentence to read as follows:

R301.6 Roof load. The roof shall be designed for the live load indicated in Table R301.6 or the snow load indicated in Table R301.2(1), whichever is greater. Roof live loads in accordance with Section 1607.11 of the 2006 International Building Code may be used in place of the loads in Table R301.6.

R302.1 Exterior walls

Section R302.1 is amended by adding a second paragraph and a new exception 4.

To determine when protection is required by Table R302.1 the dimension shall be determined from the property line to the finish face of the wall, except where the foundation dimension from property line is 5 feet or greater the foundation dimension will be used for that wall only.

4. When the wall is at 5 feet or greater to the property line with no attic vents or gable end vents along that line a maximum of 12 inch unprotected eave overhang is permitted.

Table R302.1 Exterior Walls

Table R302.1 is amended by adding footnotes to the table to read as follows:

Table R302.1 – Exterior Walls

EXTERIOR WALL ELEMENT		MINIMUM FIRE-RESISTANCE RATING	MINIMUM FIRE SEPARATION DISTANCE
Walls	(Fire-resistance rated)	1 hour with exposure from both sides	0 Feet
	(Not fire-resistance rated)	0-Hours	5 Feet
Projections	(Fire-resistance rated)	1-Hour on the underside	~~4~~ 2 Feet
	(Not fire-resistance rated)	0-Hours	5 Feet
Openings	Not Allowed	N/A	<3 Feet
	25% Maximum of Wall Area	0-Hours	3 Feet
	Unlimited	0-Hours	5 Feet
Penetrations	All	Comply with Section R317.3	<5 Feet
		None Required	5 Feet

N/A = Not Applicable

R305.1 Minimum height

Section R305.1 is amended by revising exception 4 to read as follows:

4. Bathrooms shall have a minimum ceiling height of 6 feet 8 inches (2036 mm) over the fixture and at the front clearance area for fixtures. ~~as shown in Figure R307.1.~~ A shower

or tub equipped with a shower head shall have a minimum ceiling height of 6 feet 8 inches (2036 mm) above a minimum area 30 inches (762 mm) by 30 inches (762 mm) at the showerhead.

R307.1 Space required

Section R307.1 and Figure R307.1 are deleted in their entirety without replacement.

R307.2 Bathtub And Shower Spaces

Section R307.2 is renumbered to R307.1

R307.~~2~~1 Bathtub and shower spaces. (Section remains unchanged)

R309.1 Opening protection

Section R309.1 is amended to read as follows:

R309.1 Opening protection. Openings from a private garage directly into a room used for sleeping purposes shall not be permitted. Other openings between the garage and residence shall be equipped with solid wood doors not less than 1 3/8 inches (35 mm) in thickness, solid or honeycomb core steel doors not less than 1 3/8 inches (35 mm) thick, or 20-minute fire-rated doors, each with a self-closer.

R401.3 Drainage

Section R401.3 is deleted in its entirety and replaced with a new Section R401.3 to read as follows:

R401.3 Drainage. The ground immediately adjacent to the foundation shall be sloped away from the building at a slope of not less than one unit vertical in 20 units horizontal (5-percent slope) for a minimum distance of 10 feet (3048 mm) measured perpendicular to the face of the wall. If physical obstructions or lot lines prohibit 10 feet (3048mm) of horizontal distance, a 5-percent slope shall be provided to an approved alternative method of diverting water away from the foundation. Swales used for this purpose shall be sloped a minimum of 1 percent along the flow line where located within 10 feet (3048mm) of the building foundation. Impervious surfaces within 10 feet (3048mm) of the building foundation shall be sloped a minimum of 2 percent away from the building.

Exception: Where low expansive, low collapsible, low soluble soil conditions occur or where an exterior asphalt or concrete surface abuts a building, the slope of the ground away from the building foundation is permitted to be reduced to not less than one unit vertical in 48 units (2-percent slope).

R401.4 Soil tests

Sections R401.4, R401.4.1, Table R401.4.1, and R401.4.2 are deleted in their entirety, and replaced with a new Section R401.4 to read as follows:

R401.4 Soil tests. All structures or additions shall have a soils reports complying with IBC chapter 18.

> **Exception:** At the option of the building official, the following projects may be exempted from having a geotechnical report:
>
> 1. Any structure, addition, or remodel associated with a single family residence with a footprint less than 600 square feet.
> 2. Fences.
> 3. Site retaining walls less than 5 feet in retained height.
> 4. Patio covers, decks, canopies, and carports associated with a single family residence.

Where no soil's report is required by the building official the design will be based on maximum bearing pressure of 1,500 psf and assumes a severe sulfate exposure level.

R403.1.3 Seismic reinforcing

Section R403.1.3 is amended by deleting the Exception with no replacement.

R403.1.6.1 Foundation anchorage in Seismic Design Categories C, D_0, D_1, and D_2

Section R403.1.6.1 is amended by adding the following Exception after item 1 to read as follows:

> **Exception:** Foundation anchorage, spaced as required to provide equivalent anchorage to ½-inch-diameter (13 mm) anchor bolts and square plate washers conforming to section R602.11.1.

R406.2 Concrete and masonry foundation waterproofing

Section R406.2 is amended so that the introductory paragraph, before items 1-8, reads as follows:

R406.2 Concrete and masonry foundation waterproofing. ~~In areas where~~ When the approved geotechnical report indicates there is a high water table or other severe soil-water conditions are known to exist, exterior foundation walls that retain earth and enclose interior spaces and floors below grade shall be waterproofed from the top of the footing to the finished grade. Walls shall be waterproofed in accordance with one of the following:

R502.3.1 Sleeping areas and attic joists

Subsection R502.3.1 is deleted in its entirety without replacement.

R602.6.1 Drilling and notching of top plate

Section R602.6.1 is amended to read as follows:

R602.6.1 Drilling and notching of top plate. When piping or ductwork is placed in or partly in an exterior wall or interior load-bearing wall, necessitating cutting, drilling or notching of the top plate by more than 50 percent of its width, a galvanized metal tie of not less than 0.054 inch thick (1.37mm)(16 ga) and 1½ inches (38mm) wide shall be fastened across and to the plate at each side of the opening with not less than eight ~~16d~~ 1½" x 0.148" nails at each side or equivalent. See Figure R602.6.1

> **Exception:** When the entire side of the wall with the notch or cut is covered by wood structural panel sheathing.

FIGURE R606.11(1) ANCHORAGE REQUIREMENTS FOR MASONRY WALLS LOCATED IN SEISMIC DESIGN CATEGORY A, B OR C AND WHERE WIND LOADS ARE LESS THAN 30 PSF

Figure R606.11(1) is deleted and replaced with a new Figure R606.11(1) to read as follows:

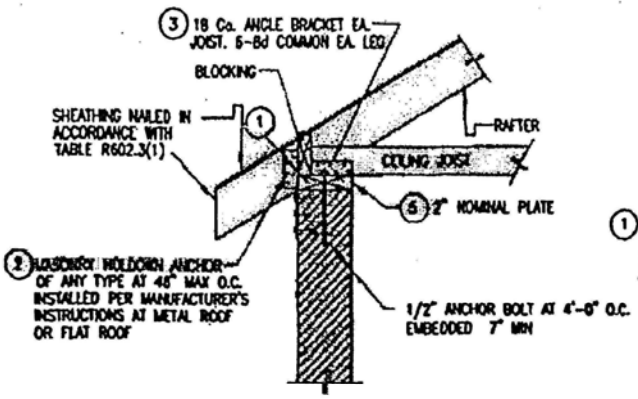

SLOPED ROOF

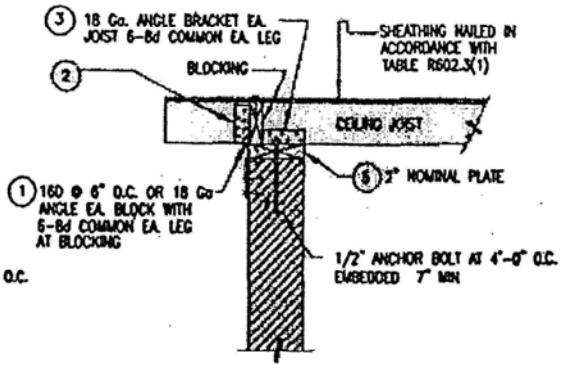

FLAT ROOF

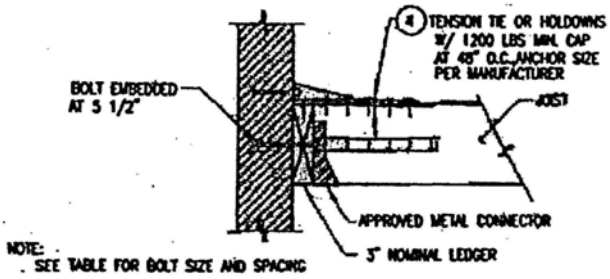

JOIST PERPENDICULAR TO WALL

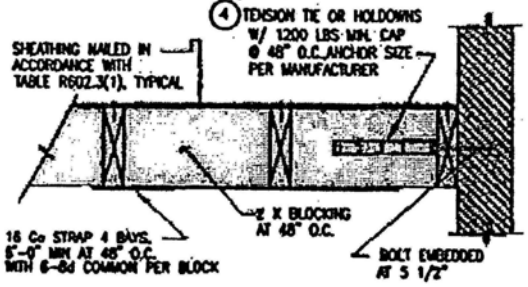

JOIST PARALLEL TO WALL

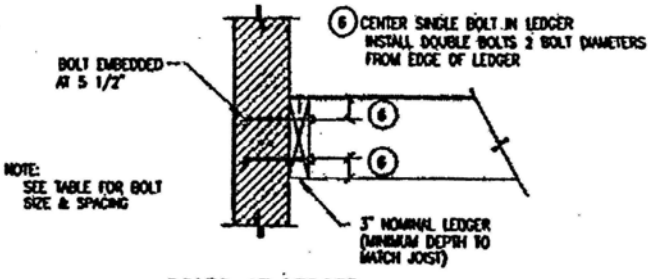

BOLTS AT LEDGER

LEDGER BOLT SPACING AND SIZE[1]

JOIST SPAN	JOIST PERPENDICULAR TO WALL		JOIST PARALLEL TO WALL	
	BOLT SIZE AND SPACING		BOLT SIZE AND SPACING	
	ROOF	FLOOR	ROOF	FLOOR
10 FT.	1/2" AT 2 FT. 0 IN. 3/4" AT 2 FT. 0 IN.	1/2" AT 1 FT. 4 IN. 3/4" AT 2 FT. 0 IN.	1/2" AT 2 FT. 0 IN.	1/2" AT 1 FT. 4 IN. 3/4" AT 2 FT. 8 IN.
10–15 FT.	(2) 1/2" AT 2 FT. 0 IN. 3/4" AT 2 FT. 0 IN.	(2) 1/2" AT 2 FT 0 IN. 3/4" AT 1 FT. 4 IN.	3/4" AT 2 FT. 0 IN.	3/4" AT 2 FT. 8 IN.
15–20 FT	(2) 1/2" AT 2 FT. 0 IN. 3/4" AT 1 FT. 4 IN.	(2) 1/2" AT 1 FT 4 IN. (2) 3/4" AT 2 FT. 0 IN.	3/4" AT 2 FT. 0 IN.	3/4" AT 2 FT. 0 IN.

1. BOLTS SHALL BE INSTALLED WITH A METAL PLATE, METAL STRAP, OR WASHER NOT LESS THAN A STANDARD CUT WASHER BETWEEN THE WOOD AND THE BOLT HEAD AND BETWEEN THE WOOD AND THE NUT.

NOTE: WHERE BOLTS ARE LOCATED IN HOLLOW MASONRY, THE CELLS IN THE COURSES RECEIVING THE BOLT SHALL BE GROUTED SOLID.
FOR SI: 1 INCH = 25.4 MM, 1 FOOT = 304.8MM, 1 POUND PER SQUARE FOOT = 0.0479KN/M²

FIGURE R606.11(1)

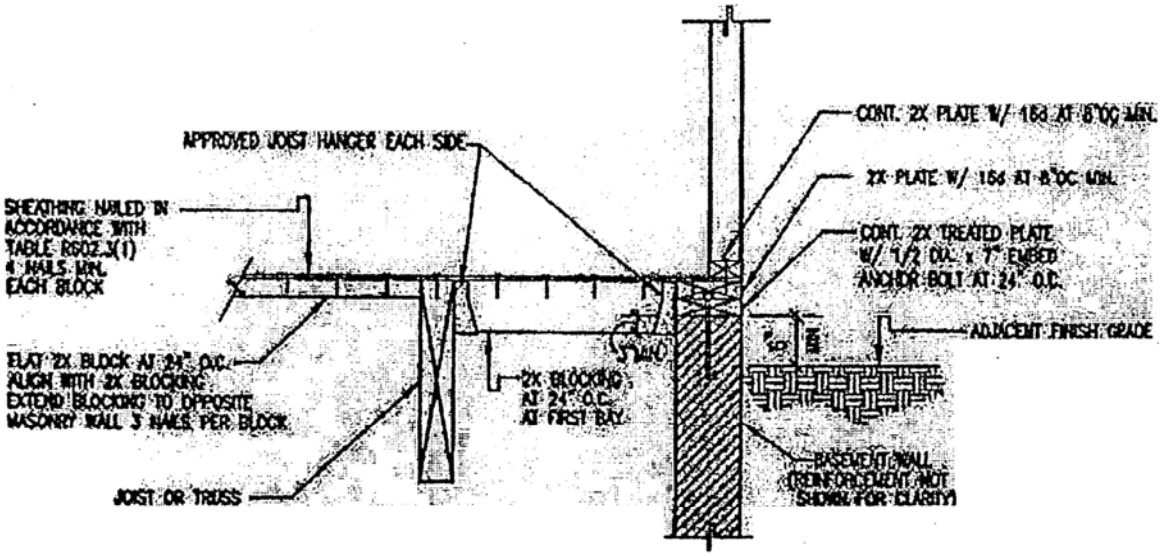

JOIST PARALLEL TO BASEMENT WALL

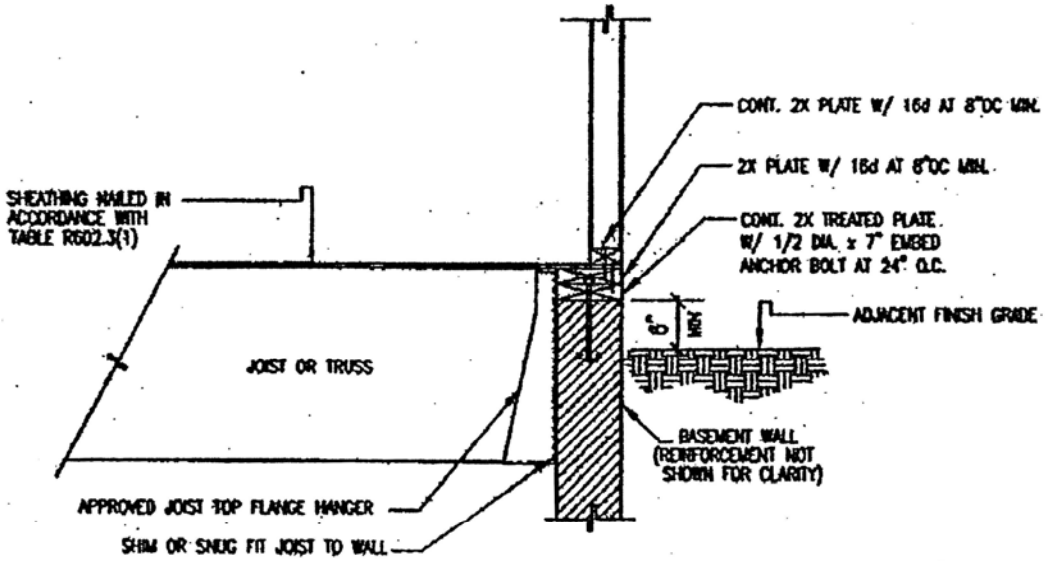

JOIST PERPENDICULAR TO BASEMENT WALL

NOTE: WHERE BOLTS ARE LOCATED IN HOLLOW MASONRY, THE CELLS IN THE COURSES RECEIVING THE BOLT SHALL BE GROUTED SOLID.
FOR SI: 1 INCH = 25.4 MM, 1 FOOT = 304.8MM, 1 POUND PER SQUARE FOOT = 0.0479KN/M

FIGURE R606.11(1)
ANCHORAGE REQUIREMENTS FOR MASONRY WALLS LOCATED IN SEISMIC DESIGN CATEGORY A, B OR C AND WHERE WIND LOADS ARE LESS THAN 30 PSI

R702.3.8 Water-resistant gypsum backing board

Section R702.3.8 is amended by adding an Exception to read as follows:

> **Exception:** If sealing material is not specified by the manufacture, then a water-resistant flexible sealant meeting ASTM C920, Type S, Grade NS, class 25 material may be used.

R802.9 Framing of openings

Section R802.9 is amended to read as follows:

R802.9 Framing of openings. Openings in roof and ceiling framing shall be framed with header and trimmer joists. When the header joist span does not exceed 4 feet (1219 mm), the header joist may be a single member the same size as the ceiling joist or rafter. Single trimmer joists may be used to carry a single header joist that is located within 3 feet (914 mm) of the trimmer joist bearing. When the header joist span exceeds 4 feet (1219 mm), the trimmer joists and the header joist shall be doubled and of sufficient cross section to support the ceiling joists or rafter framing into the header. Approved hangers shall be used for the header joist to trimmer joist connections when the header joist span exceeds 6 feet (1829 mm). Tail joists over 12 feet (3658 mm) long shall be supported at the header by framing anchors.~~or on ledger strips not less than 2 inches by 2 inches (51 mm by 51 mm).~~

R807.1 Attic access

Section R807.1 is amended so that the first paragraph reads as follows:

R807.1 Attic access. Buildings with combustible ceiling or roof construction shall have ~~an attic access opening to attic areas that exceed 30 square feet (2.8 m2) and have a vertical height of 30 inches (762 mm) or more.~~ at least one attic access opening. Additional access openings shall be provided to attic areas that have have electrical, plumbing, or mechanical fixtures or equipment that require access for periodic maintenance.

> Exception: Access openings are not required for non-contiguous enclosed attic spaces that do not have plumbing, mechanical, or electrical components that require access for periodic maintenance.

R905.7 Wood shingles

Section R905.7 is amended to read as follows:

R905.7 Wood shingles. ~~The installation of wood shingles shall comply with the provisions of this section.~~ Not permitted.

R905.8 Wood shakes.

Section R905.8 is amended to read as follows:

R905.8 Wood shakes. ~~The installation of wood shakes shall comply with the provisions of this section.~~ Not permitted.

R1007 Types Of Fireplaces.

A new section R1007 is added to read as follows:

R1007 Types of fireplaces. No fireplace shall be constructed in any residential dwelling in Boulder City or the Las Vegas Valley Hydrographic Basin at an elevation of less than 4000 feet (1220 m) above sea level unless it is one of the following:

a) A fireplace equipped with gas logs with a nationally recognized listing approved by the Building Official.
b) A dedicated natural gas burning factory-built fireplace with a nationally recognized listing approved by the Building Official.
c) A dedicated wood-burning factory-built enclosed fireplace or heater that conforms to the "Phase II Environmental Protection Agency, Standards of Performance for New Stationary Sources, New Residential Heaters" as prescribed in 40 CFR Part 60, Subpart AAA, as verified by a nationally recognized listing approved by the Building Official.
d) A masonry fireplace that includes the installation of a wood-burning insert which meets the standards described in Paragraph c of this Subsection and which is installed in accordance with the manufacture's instructions, or
e) A decorative electrical appliance with a nationally recognized listing approved by the Building Official.

R1008 Fireplace Requirements.

A new section R1008 is added to read as follows:

R1008 Fireplace requirements. A gas or wood-burning fireplace installed within a dwelling unit shall comply with the following requirements:

a) The fireplace opening shall be provided with solid doors such as glass, solid steel, or cast iron.
b) If the fireplace is located in a sleeping room or an adjacent bathroom, then a permanent, unobstructed fresh air supply shall be provided directly from the exterior of the structure to the fire box.

c) When gas is piped to the fireplace, a caution sign shall be installed that states "Caution: Damper must be permanently blocked open if gas is supplied to this fireplace." The letters on the sign shall be a minimum of 3/8 inches in height.

CHAPTERS 11 through 42.

Delete chapters 11 through 42 in their entirety.

Appendices A through G, I, J, L through Q.

Delete Appendices A through G, I, J, and L through Q in their entirety.